vyanzo
QUALITY CASTINGS

V30/60Z

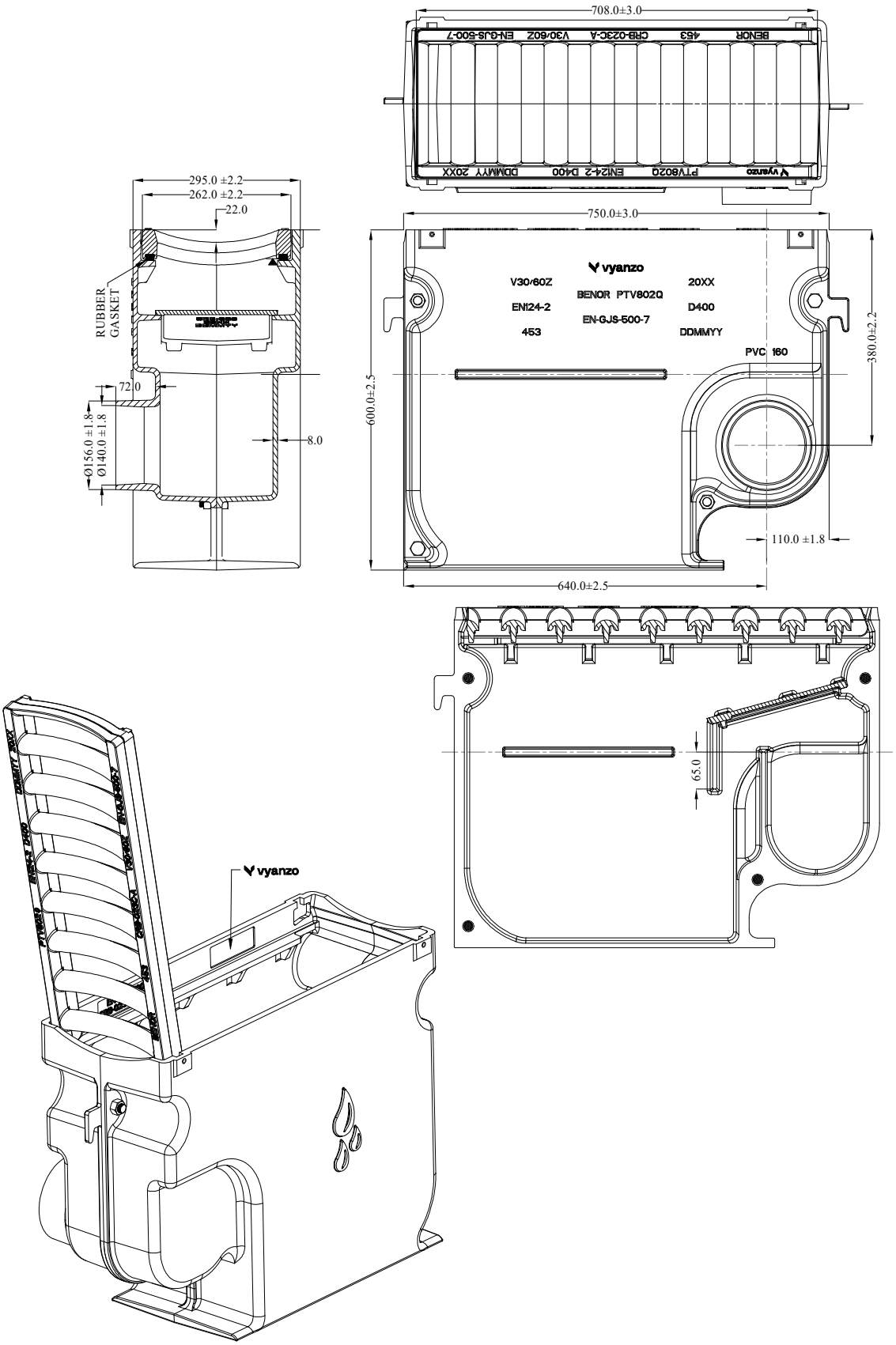

www.vyanzo.be

vyanzo
QUALITY CASTINGS

V30/60Z

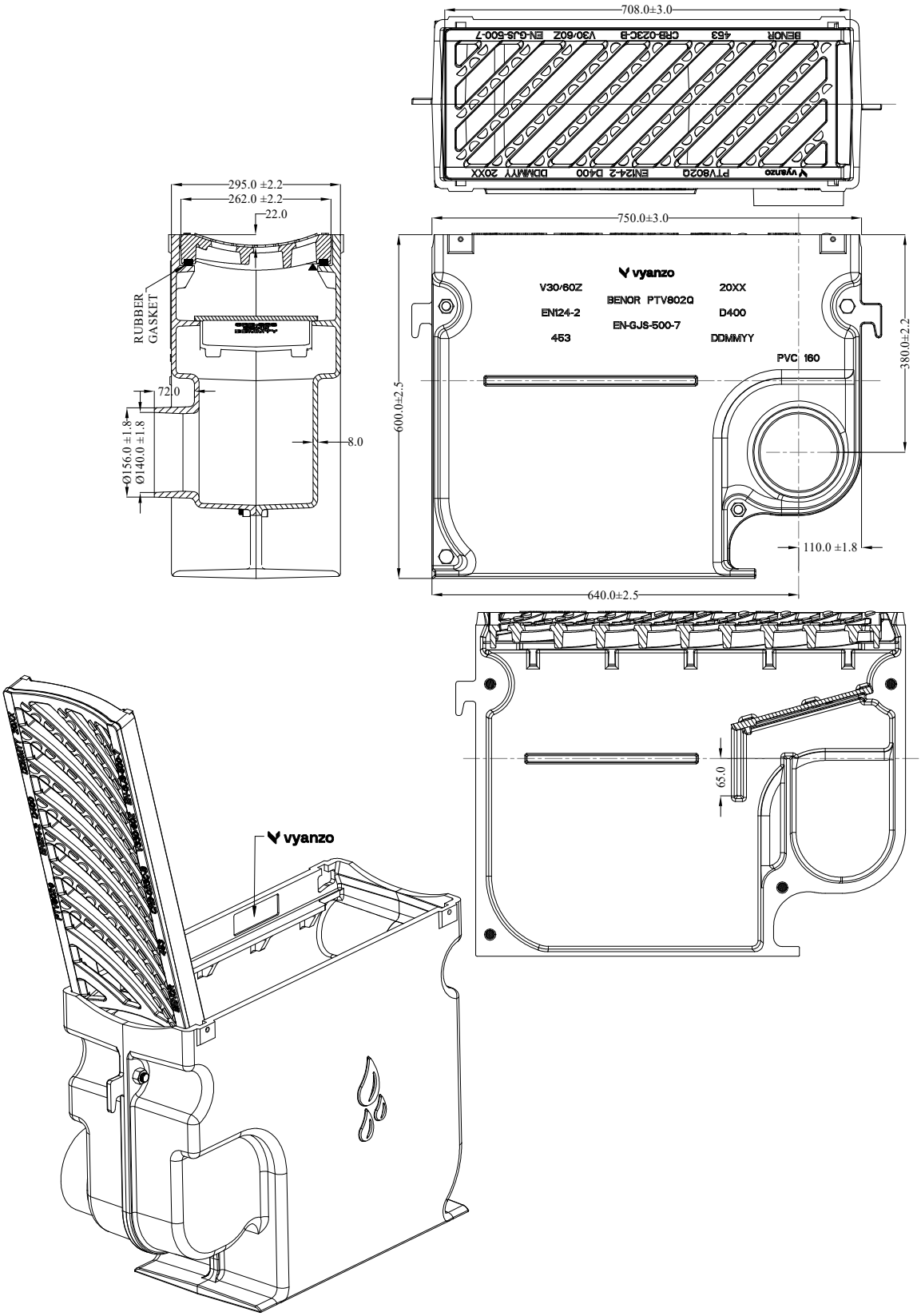

www.vyanzo.be

vyanzo
QUALITY CASTINGS

V30/60Z

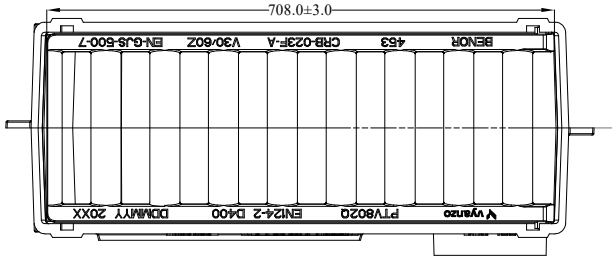

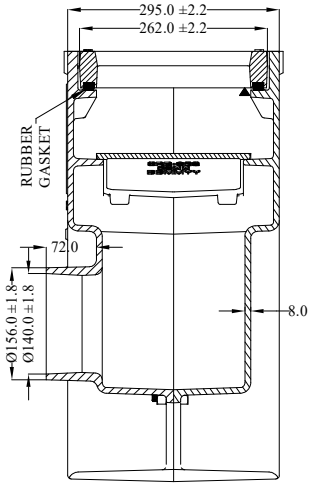

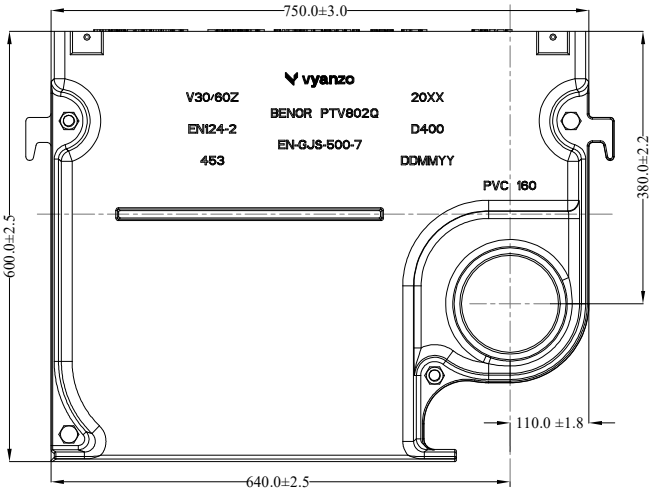

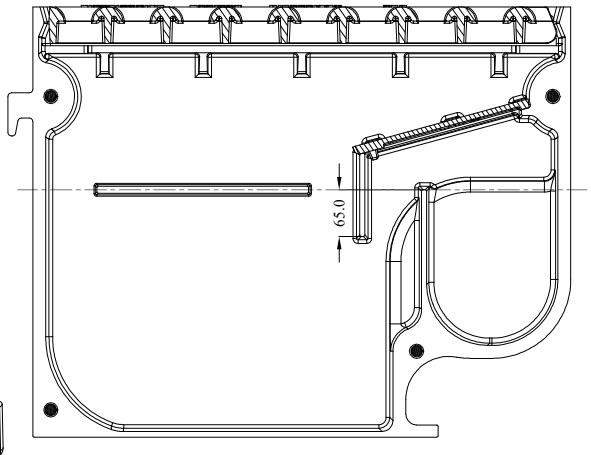

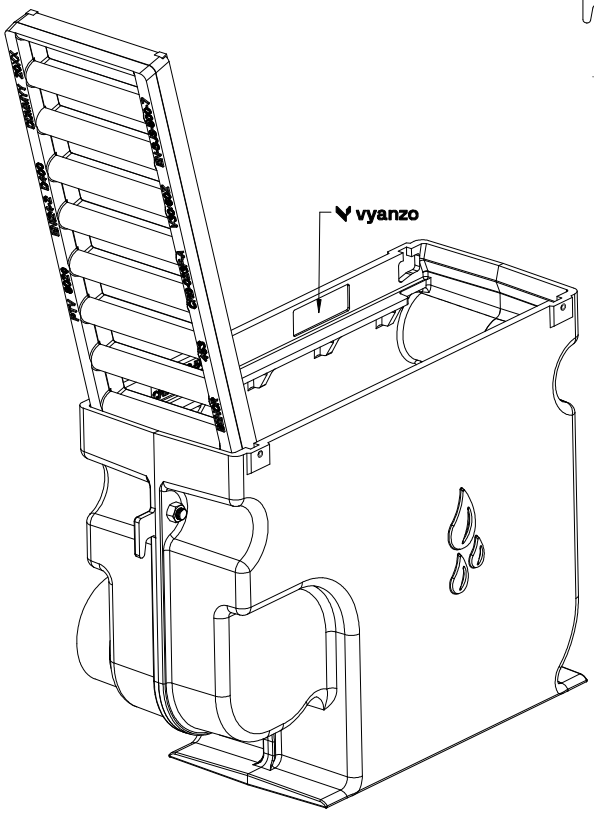

www.vyanzo.be

vyanzo
QUALITY CASTINGS

V30/60Z

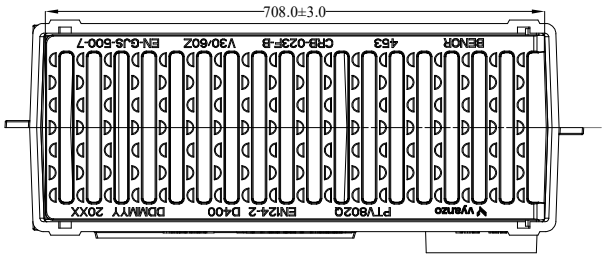

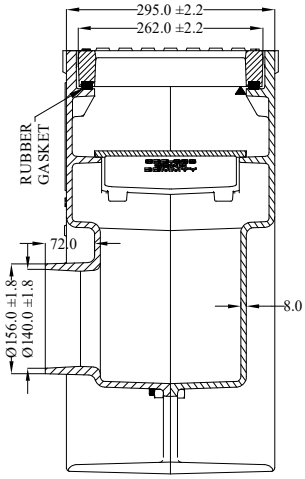

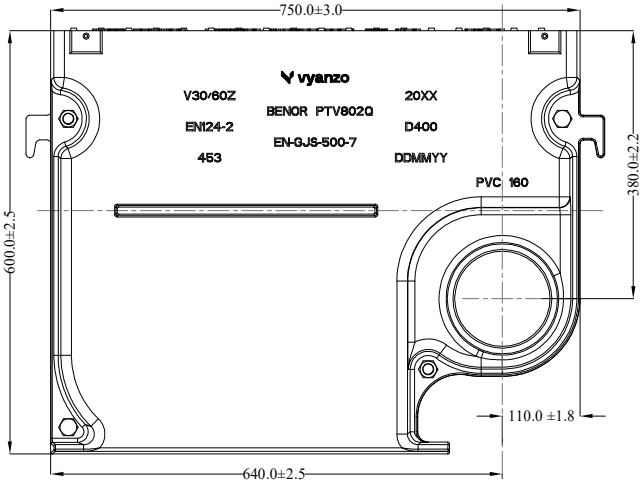

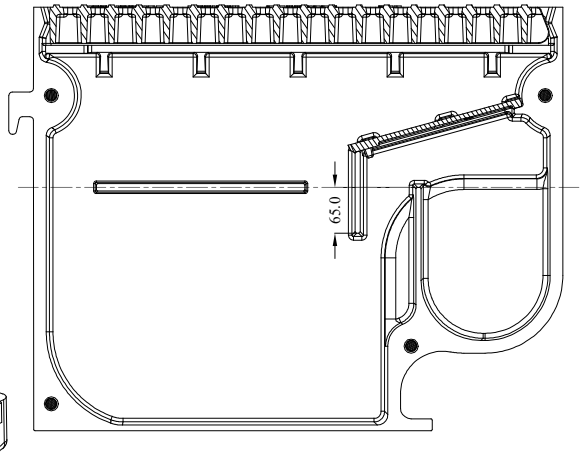

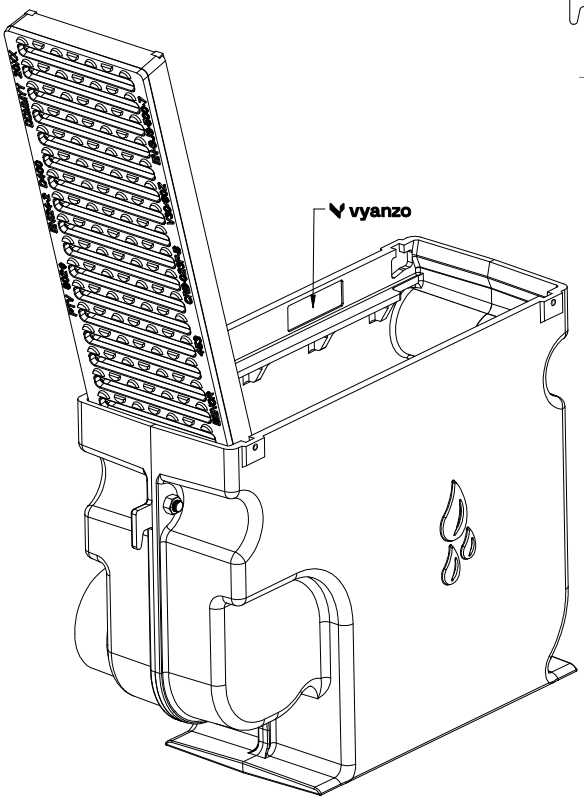

www.vyanzo.be

vyanzo
QUALITY CASTINGS

V30/60Z

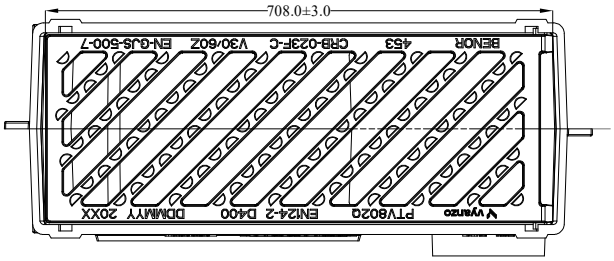

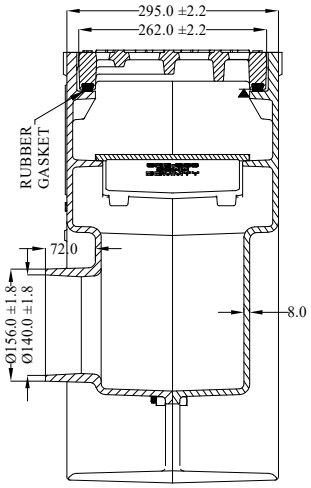

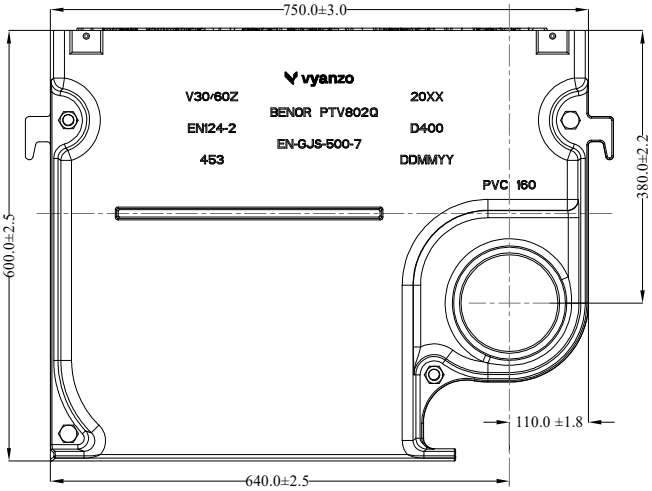

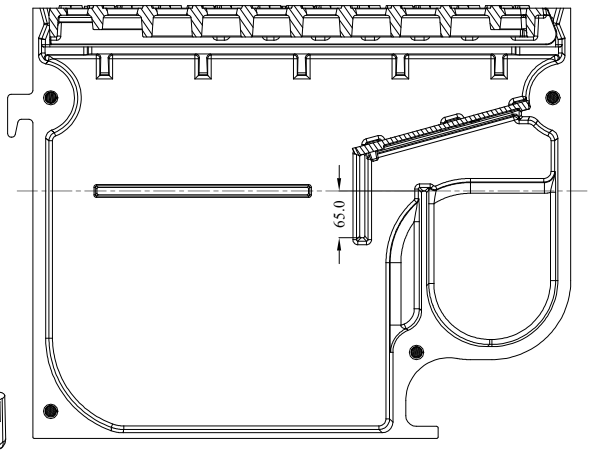

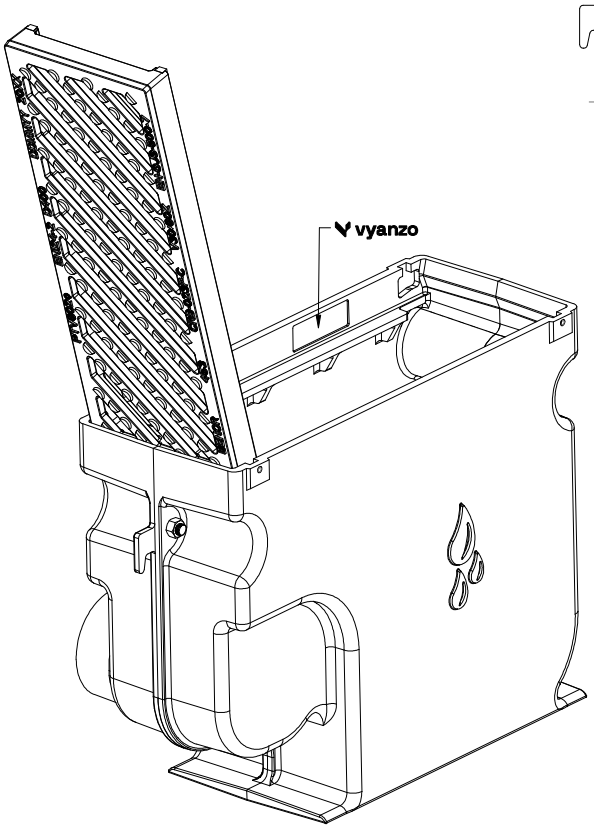

www.vyanzo.be